MARCONI MARINE SHORT WAVE RECEIVER

TYPE 372

The short wave receiver, type 372, described below, has been designed for use on board ship in the many cases where reception on waves of 14 to 100 metres is necessary.

The outstanding features of this receiver are simplicity and ease of control. An oscillating detector is employed where reception of C.W. is desired, and oscillation can be easily controlled by a condenser.

The set is very efficient and represents a considerable advance in short wave marine receiver design.

THE Marconi type 372 receiver is designed for ordinary marine short wave working over a waveband of 14 to 100 metres. As will be seen from the diagram of connections, Fig. 1, it employs three valves, namely, a screen grid valve between the oscillating detector valve and the aerial, in order to decrease to a minimum the amount of energy radiated from the receiving aerial when reception is taking place, a detector valve, and one note magnifying valve, having an output transformer in its anode suitable for use with low resistance telephones.

The receiver is arranged to work on 72 volts H.T. with a tapping of 48 volts for the screen grid of the screen grid valve.

Among the important features incorporated in this receiver are the method of wave-change by means of a switch, the use of anti-induction chokes in the battery [illegible] to a minimum.

To aid reception, a milliammeter is inserted in the anode of the detector valve, while a voltmeter across the filament of the valves indicates when the filaments are being supplied with the correct voltage. The instrument is mounted on a rigid metal panel and a baseboard. All component parts of the instrument are attached to this panel and baseboard, and the whole of the receiver is housed in a strong metal case.

By unscrewing the screws on the edge of the front panel, the receiver may be entirely withdrawn from its case, thus rendering a detailed examination easy.

In order to assist in any change of valves or to permit a rapid inspection of the receiver, the top of the box is made in the form of a lid hinged at the back.

The metal front of the receiver is covered with a black bakelite panel on which is engraved the function of each control knob.

Power Supply.

The receiver is designed to work on 2-volt valves of the following types :—

(*a*) Screen Grid Valve, S.215.

(*b*) Oscillating Detector Valve, H.L.210.

(*c*) L.F. Amplifier Valve, L.210, or Pentode Valve type P.T.235.

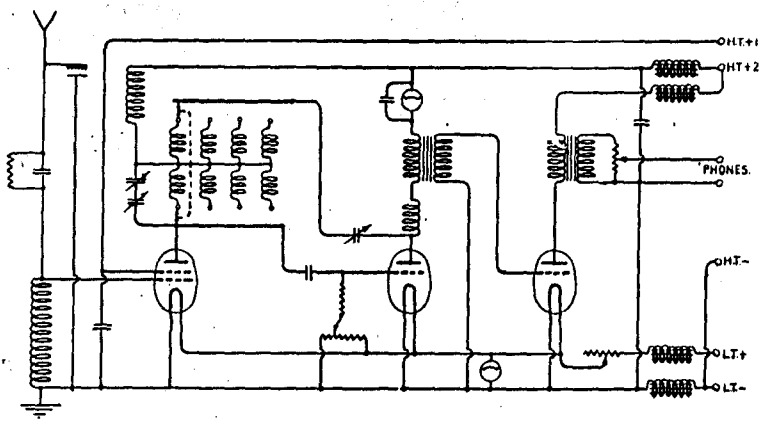

FIG. 1.

As will be noticed from the diagram of connections of this receiver, both the high tension and low tension supplies are taken through chokes embodied in the receiver. The resistance of these chokes on the low tension circuit is approximately 6 or 7 ohms, and hence the fall of voltage in these chokes prevents the use of a 2-volt battery when utilising 2-volt valves.

To overcome this difficulty, a filament rheostat has been incorporated in the positive side of the L.T. supply, between the positive L.T. supply and the valves, together with a voltmeter which is connected directly across the filaments of the valves.

In this manner, it is possible to make use of a 4-volt or 6-volt battery, whichever is more suitable for lighting the filaments of the 2-volt valves, the filament rheostat being utilised to maintain the filaments of the valves at 2-volts as indicated by the voltmeter.

The filament rheostat is arranged to be broken when turned full round to its "off" position, and therefore, in order to switch off the set and prevent unwanted consump-

tion of current, it is only necessary to rotate the filament rheostat to the end of its travel in an anti clockwise direction.

It is permissible to use 4-volt or 6-volt valves of equivalent types to those cited above, but it will, of course, be necessary in this case to use 6-volt or 8-volt supply for the filaments of these valves.

Similar precautions to reduce induction interference, which may be picked up on battery leads, are taken with regard to the high tension supply, and in order to make full use of this arrangement, the negative high tension terminal and the negative low tension terminal should not be joined together external to the set, unless this is unavoidable.

In the case of the high tension chokes, the resistance is insufficient to cause a serious drop of voltage in the high tension supply, and therefore no adjustment is made in the high tension voltage to counteract the effect of the chokes.

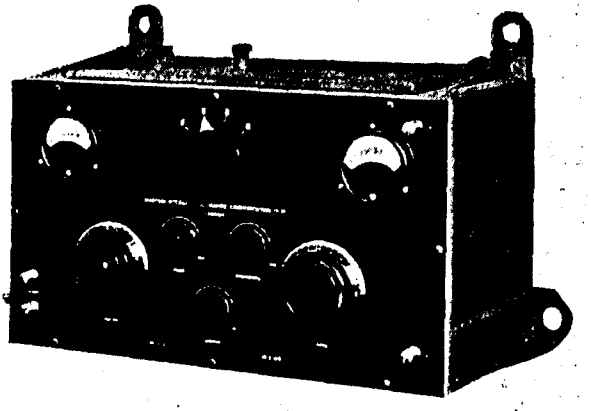

FIG. 2.

No choke is inserted in the screen grid high tension supply, but a condenser is placed across the screen grid to earth.

Aerial Circuit.

The aerial circuit consists of a simple semi-aperiodic arrangement. The aerial is connected direct to the terminal marked AE on the receiver, and from that terminal passes through the series condenser and the high frequency choke to the earth terminal marked E.

Across the series condenser in the aerial, is placed a static leak, to prevent accumulation of static charge on the aerial.

In addition to this static leak, a spark gap is placed between the aerial terminal and the back of the earthed receiver panel. This spark gap will deal adequately with sudden heavy charges which may accumulate on the aerial during stormy weather, and which otherwise might cause repeated breakdown of the static leak.

The aerial side of the high frequency choke is connected directly to the grid of the screen grid valve.

No tuning of the aerial is attempted as signal strength from the main aerial of a ship is generally more than adequate for the requirements of short wave traffic, and it eliminates the necessity of utilising two tuning condensers, which is a serious obstruction to rapid searching under marine conditions.

Tuned Circuit.

The reception of C.W. signals on this short wave receiver is obtained by means of the well-known method of utilising an oscillating detector valve.

The oscillating circuit is placed in the anode of the screen grid valve and is connected to the grid of the detector valve by means of a grid condenser and grid leak. One end of the grid leak is connected to a potentiometer so that smooth reaction may be obtained on any wavelength within the range of the receiver, by selecting a suitable position on the potentiometer.

Reaction is obtained by means of a variable condenser coupled between the choke in the anode of the detector valve, and a reaction winding placed adjacent to the tuning inductance in the tuned circuit of the anode of the screened grid valve.

In the anode of the detector valve is inserted a low frequency transformer and a milliammeter. This latter enables reaction to be obtained and controlled with the smoothest possible adjustment, and is an important aid to the reception of signals under bad conditions.

In the anode of the screen grid valve, in addition to the tuned circuit, is inserted a small high frequency choke. The purpose of this choke is to enable very smooth reaction to be obtained.

It has been found desirable to utilise four stages of tuning to cover the wave-range of 14 metres to 100 metres. The first of the tuned stages covers a waverange of approximately 14 to 23 metres, the second approximately 20 to 40 metres, the third approximately 30 to 60 metres, and the fourth stage 50 to 100 metres approximately.

The difficulty of using plug-in coils has been overcome by means of a switch on which are mounted the tuning and reaction coils for the four stages.

Precautions have been taken with regard to the tuning condenser to prevent the possibility of noises creeping in during the process of tuning owing to slight variations

of contact between the rotor and the fixed terminal to which the rotor is connected. To overcome this, two condensers are arranged in series. The rotors of the two condensers, both mechanically and electrically, form one unit. This rotor is insulated at both ends from the frame of the condenser. The two sets of fixed vanes are separately mounted on heavy insulation, and are entirely separate from one another.

By utilising this method of making the tuning condenser for short waves, it is possible to carry the wires from the inductance to two fixed points on the tuning condenser.

Experience shows that this method of connecting up a short wave tuning condenser gives extreme freedom from noise.

L.F. Circuit.

The rectified low frequency signal obtained in the anode of the detector valve is transferred by means of an L.F. transformer to the grid of the low frequency amplifying valve. As it is unnecessary in telegraphic work to consider the importance of quality, a grid bias battery is dispensed with, and the grid of the low frequency output valve is biased directly on the negative side of the valve.

In the anode of the L.F. amplifying valve is inserted a step down transformer, which is suitable for use in conjunction with low resistance telephones.

It will be noticed that the telephones are not connected directly across the secondary of this transformer, but via a potentiometer to the transformer.

The potentiometer serves as a volume control, and is extremely useful under conditions in which fading seriously upsets the sensitivity of the ear of the operator.

One side of the telephone is connected directly to earth so that there is no chance of the operator obtaining shocks through the breakdown of a telephone transformer.