TYPE 89P

ANSMITTER & MODULATOR CIRCUITS WITH THEIR POWER SUPPLIES

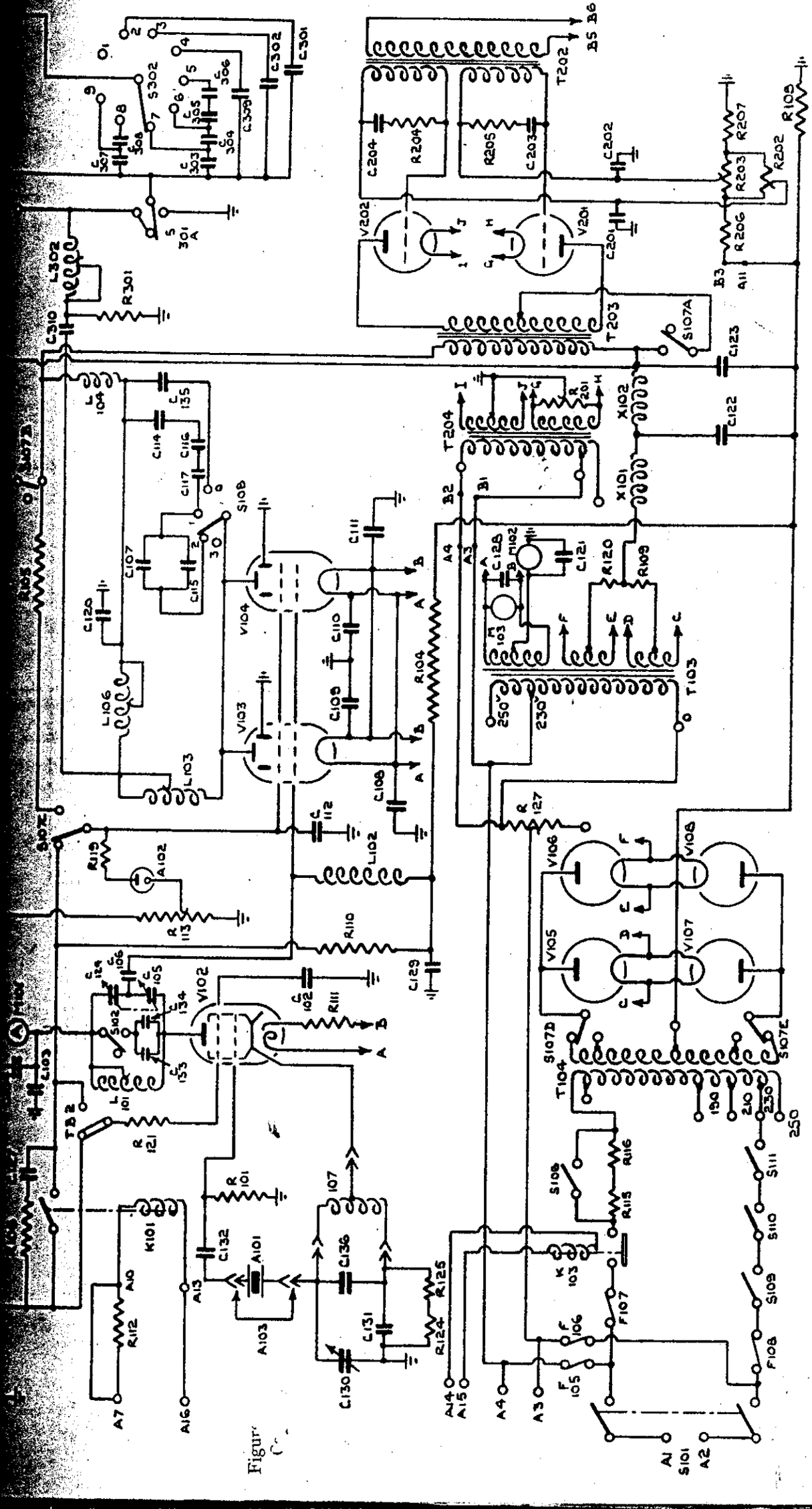

Figur