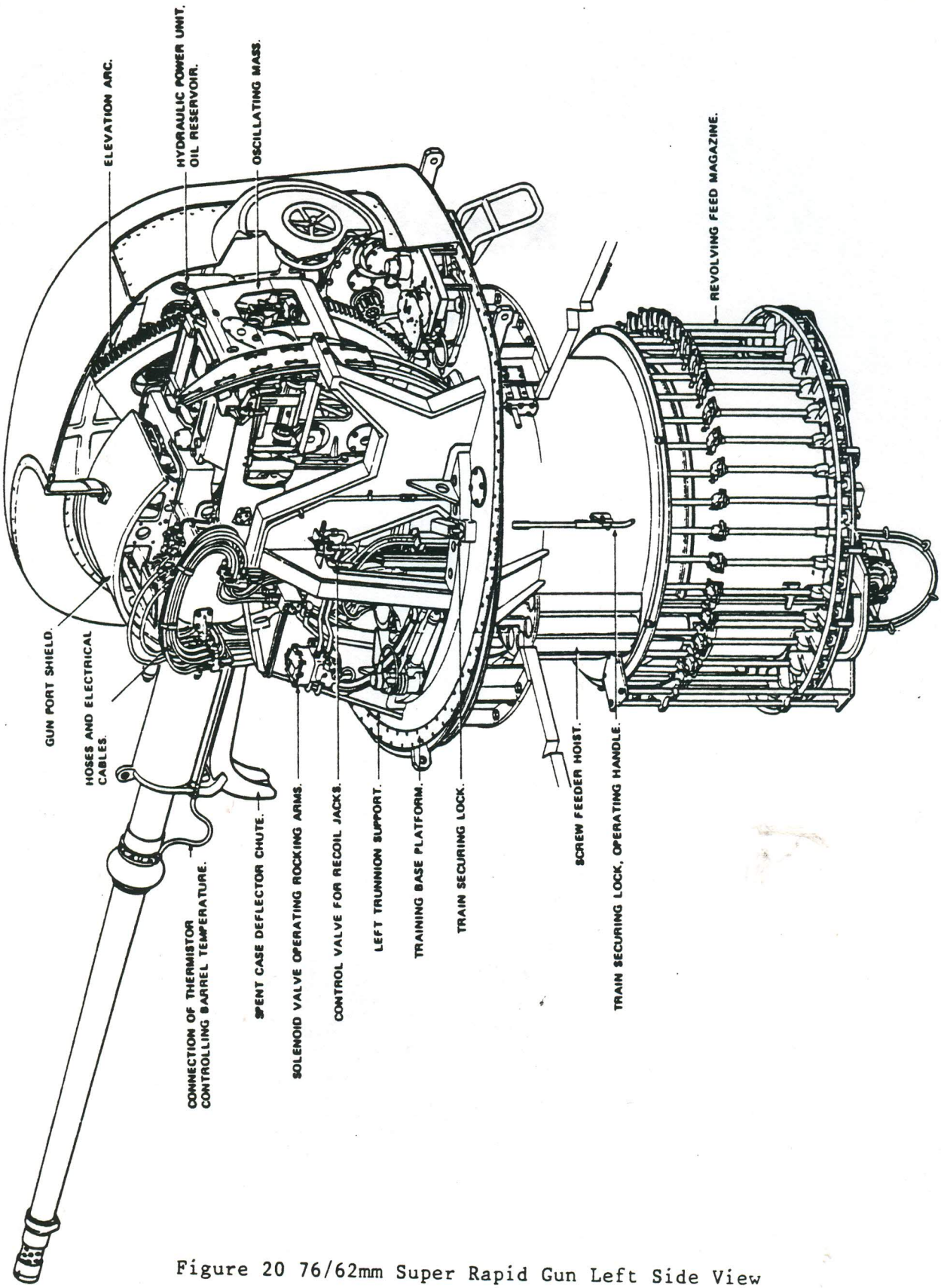

Figure 20 76/62mm Super Rapid Gun Left Side View